HATCH BATHROOM ACCESSORIES

Product Name: **GLASS TOOTHBRUSH HOLDER**
Model Number: HAT-SGH001R

2 YEARS WARRANTY

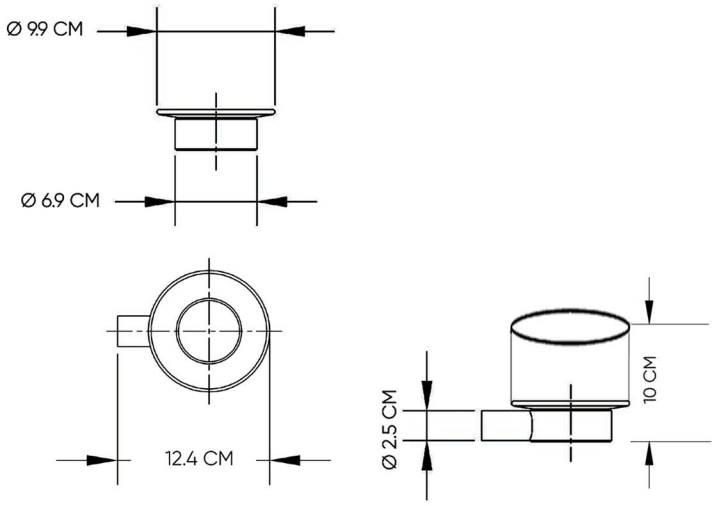



AVAILABLE COLORS

GLOSSY CHROME	MATTE BLACK	BRUSHED NICKEL	GLOSSY GOLD	BRUSHED GOLD	BLACK TITANIUM	ANTIQUE GOLD
SW01540115	SW01540116	SW01540117	SW01540118	SW01540119	SW01540120	SW-60198761

DESCRIPTIONS

Material: Glass toothbrush cup, stainless steel (SUS 304) Holder
Shape: Round
Packaging unit: 1 set

APPLICATIONS

Bathroom

DIMENSIONS

10 x 12.4 x 9.9 CM

BOX COMPONENTS

- Glass Toothbrush cup with holder
- Fischer wall plug set
- (SUS 304) screws
- Allen key

WARRANTY

2 years

COUNTRY OF ORIGIN

Made in China for HATCH Sanitary

hatch-products.com

HATCH SANITARY
Hatch Sanitary is a trademark owned by MHG

Old Al Kharj Road, Building No. 3533
Riyadh 14511 - 8305
Kingdom of Saudi Arabia

info.mhg@marketing-home.com
800 122 2230