HATCH SHATTAF MIXERS

Product Name: **WALL-MOUNTED SHATTAF MIXER**
Model Number: HAT-MX003

7 YEARS WARRANTY
CONCEALED MIXER

2 YEARS WARRANTY
MIXER ACCESSORIES, MECHANICAL PARTS AND SURFACE

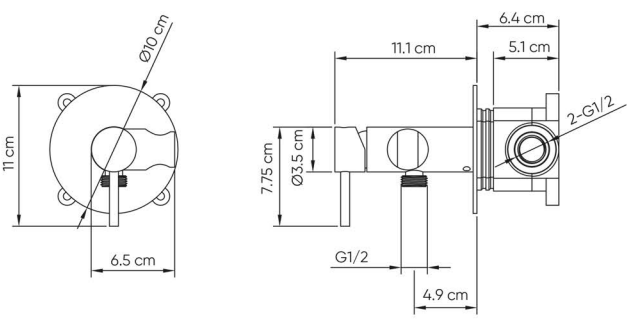



AVAILABLE COLORS

GLOSSY CHROME	MATTE BLACK	BRUSHED NICKEL	GLOSSY GOLD	BRUSHED GOLD	BLACK TITANIUM	ANTIQUE GOLD
SW01330008	SW01330402	SW01330401	SW-01720033	SW-01720034	SW-01720035	SW-60198750

DESCRIPTIONS

Wall-Mounted Shattaf Mixer
Material: Main body, Concealed Mixer: Brass, Frame: Stainless steel (SUS 304)
Shape: Round
Packaging unit: 1 piece

TECHNICAL SPECIFICATION

Maximum Flow rate at 3 bar: 12 L/min
Maximum operating pressure: 15 bar
Minimum operating pressure: 1 bar
Ceramic cartridge
With a plastic non-return valve: Yes
Installation type: Wall-mounted
Water inlet/outlet: G ½ in
With embodded box, Easy to install
Non-scratch holder for shattaf: Yes

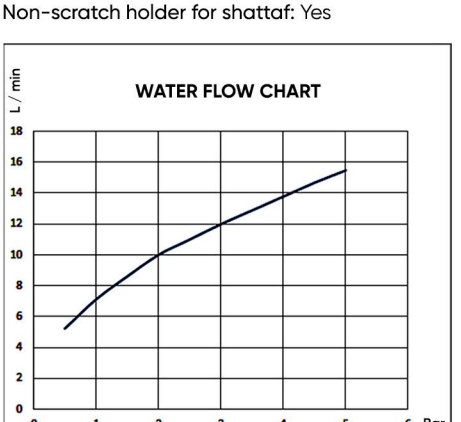

DIMENSIONS

Ø 10 x 11 x 11.1 CM

APPLICATIONS

Bathroom

BOX COMPONENTS

- Handle
- Concealed Mixer with Protection box
- (SUS 304) Frame
- (SUS 304) Screws
- Fischer wall plug set
- 2 pcs Brass connectors
- Mounting Rings & Rubber
- Allen key

COUNTRY OF ORIGIN

Made in China for HATCH Sanitary

WARRANTY

7 years for concealed mixer
2 years for mixer accessories, mechanical parts and surface

hatch-products.com

HATCH SANITARY
Hatch Sanitary is a trademark owned by MHG

Old Al Kharj Road, Building No. 3533
Riyadh 14511 - 8305
Kingdom of Saudi Arabia

info.mhg@marketing-home.com
800 122 2230