HATCH SHOWER ACCESSORIES

Product Name: **SHOWER ELBOW**
Model Number: HAT-ADT001

10 YEARS WARRANTY

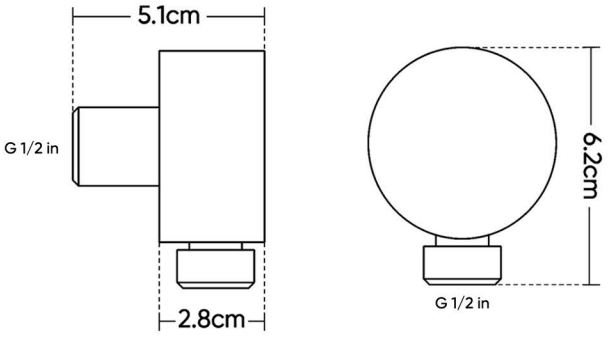



AVAILABLE COLORS

GLOSSY CHROME	MATTE BLACK	BRUSHED NICKEL	GLOSSY GOLD	BRUSHED GOLD	BLACK TITANIUM	ANTIQUE GOLD
SW01330093	SW01330094	SW01330095	SW01530033	SW01530032	SW01530034	SW-60198745

DESCRIPTIONS

Material: Brass
Shape: Round
Packaging unit: 1 piece

APPLICATIONS

Bathroom

DIMENSIONS

6.2 x 2.8 x 5.1 CM

BOX COMPONENTS

Shower Elbow

TECHNICAL SPECIFICATION

Water inlet & outlet: G 1/2 in

COUNTRY OF ORIGIN

Made in China for HATCH Sanitary

WARRANTY

10 years

hatch-products.com

HATCH SANITARY
Hatch Sanitary is a trademark owned by MHG

Old Al Kharj Road, Building No. 3533
Riyadh 14511 - 8305
Kingdom of Saudi Arabia

info.mhg@marketing-home.com
800 122 2230